TL.60MH Motorcycle & ATV Lift

TL.60MH is a professional motorcycle and ATV lift with 600kg capacity, it comes with an adjustable wheel vice and approach ramps. Can be fitted with optional width and length extension kits.

SPECIFICATIONS									
Model	Lifting Capacity	Lifting Height	Lifting Time	Overall Length (inc Ramp)	Runway Length	Overall Width	Minimum Height	Gross Weight	Motor
TL.60MH	600Kg	1090mm	23Sec	2755mm	2250mm	750 mm	155mm	250Kg	1.5HP

FEATURES & OPTIONAL EXTRAS

- 600Kg Capacity.
- Electric hydraulic control.
- Automatic safety lock activation.
- Skid proof diamond platform.
- Removeable rear cover is convenient for rear wheel changing.
- Quick removeable approach ramps.
- Adjustable wheel vice to extend axle base up to 410mm.
- Optional lifting jack; perfect for wheel removal
- Optional width extension kit - adds 600mm
- Optional length extension kit - adds 400mm

Tufflift Hoists Australia

Head Office 46 Saintly Drive, Truganina, VIC 3029

Phone +61 3 8375 3600 **Fax** +61 3 8353 2525 **Email** sales@Tufflift.com.au

Freecall 1800 88 33 50 **www.Tufflift.com.au**

TUFFLIFT .com.au

HOISTS FOR EVERY SPACE

TL.60MH

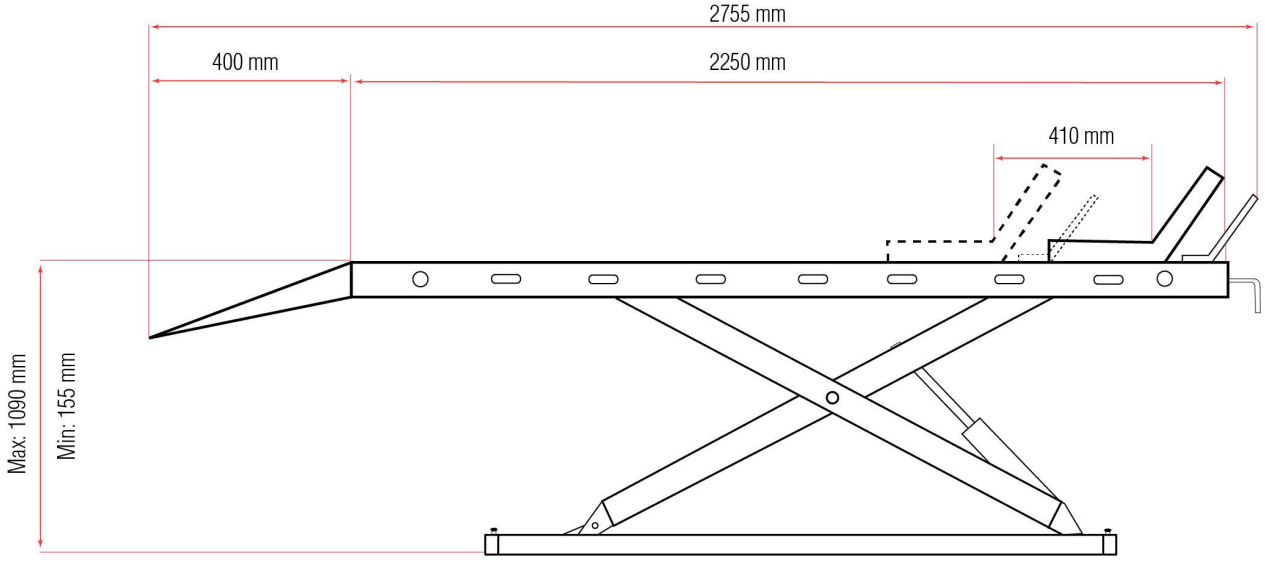

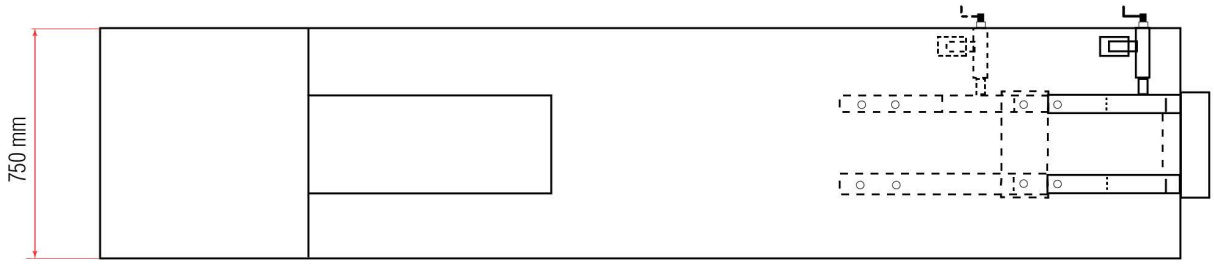

Tufflift Hoists Australia

Head Office 46 Saintly Drive, Truganina, VIC 3029

Phone +61 3 8375 3600 **Fax** +61 3 8353 2525 **Email** sales@Tufflift.com.au

Freecall 1800 88 33 50 **www.Tufflift.com.au**

TUFFLIFT .com.au

HOISTS FOR EVERY SPACE